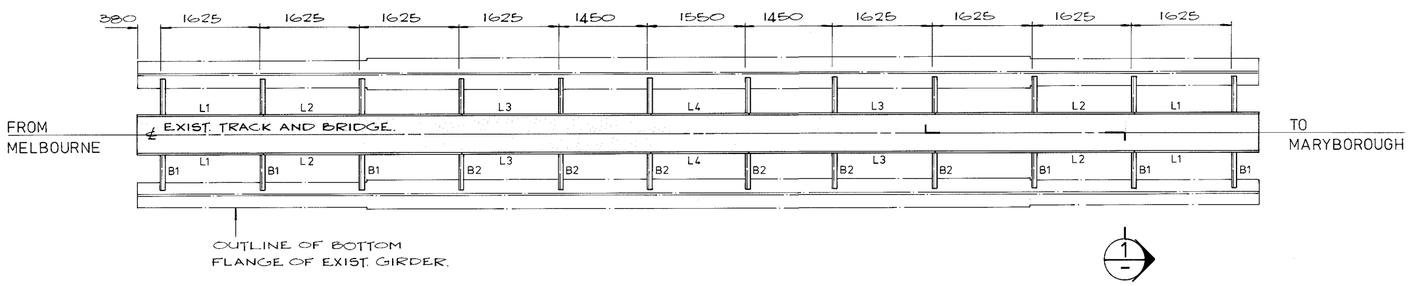

PLAN OF EXIST. 18288 (60 FT.) LG. GIRDER - 14 NO. OFF.

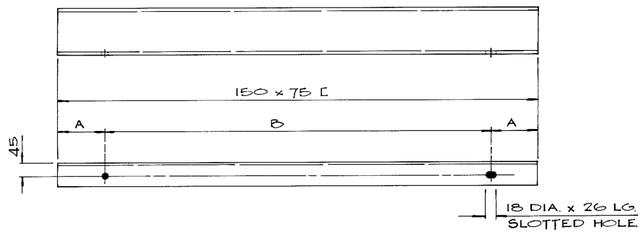

[TABLE			
MK	A	B	O/A
B1	110	1545	1765
B2	130	1505	1765

B1 - 84 NO. OFF.
B2 - 84 NO. OFF.
N.T.S

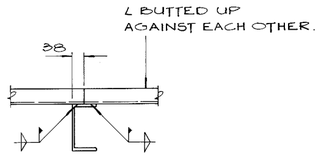

SECTION 2

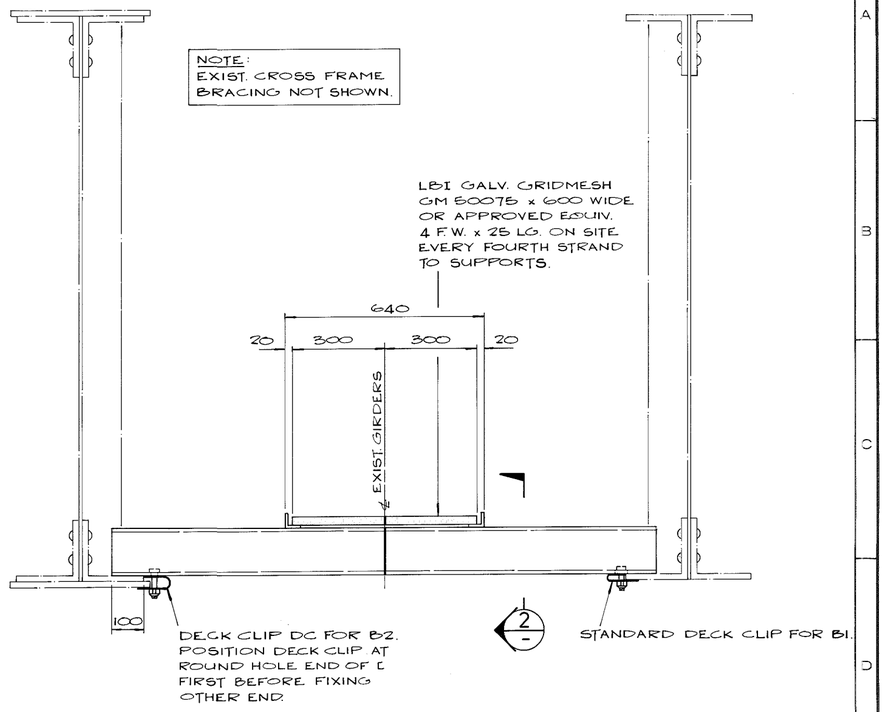

SECTION 1

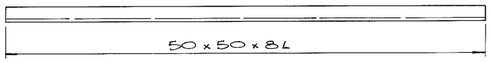

L TABLE	
MK	O/A
L1	2043
L2	3250
L3	3075
L4	1550

L1 - 56 NO. OFF.
L2 - 56 NO. OFF.
L3 - 56 NO. OFF.
L4 - 28 NO. OFF.
N.T.S

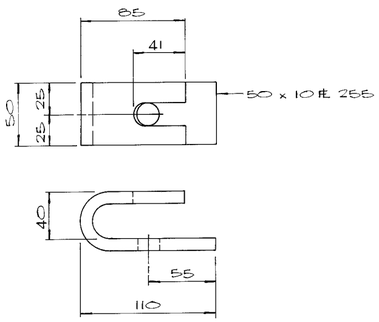

DC - DECK CLIP

FASTENER SCHEDULE		
DESCRIPTION	LOCATION	NO. OFF
STANDARD DECK CLIP DIMENSION 'A' = 3/4"	B1	168
M16 x 65 LG. BOLT WITH CONELOK NUT	B1	168
M16 x 85 LG. BOLT WITH CONELOK NUT	B2	168
DC DECK CLIP SEE DETAIL	B2	168

NOTES

1. ALL STRUCTURAL STEELWORK SHALL BE GRADE 250 STEEL COMPLYING WITH AS 1204.
2. MATERIALS, FABRICATION AND ERECTION SHALL COMPLY WITH AS 1250.
3. ALL WELDS TO BE 6MM FILLET WELDS UNLES NOTED OTHERWISE.
4. ALL WELDING SHALL COMPLY WITH AS 1554, PART 1, CATEGORY G.P. (GENERAL PURPOSE).
5. ALL HOLES TO BE 18 DIA. UNLESS NOTED OTHERWISE.
6. ALL BOLTS, NUTS AND WASHERS SHALL BE COMMERCIAL GRADE COMPLYING WITH AS 1111, AS 1112 AND AS 1237.
7. FOR DETAILS OF STANDARD DECK CLIPS REFER TO DRAWING NO. F358A.
8. FOR ALL ON SITE WELDING, THE EXISTING SUPERSTRUCTURE STEEL SHALL BE PROTECTED FROM ANY WELDING SPATTER AND/OR SPARKS.

0 50 100 150mm

APPROVALS	REV'N	DATE	DESCRIPTION	REV'D	APP'D

DRAWN	J.M.S
DESIGNED	C.C
CHECKED	C.C
CORRES.	

STRUCTURAL DESIGN ENGINEER

STATE TRANSPORT AUTHORITY VICTORIA
TRANSPORT OPERATIONS DIVISION
CASTLEMAINE - MARYBOROUGH.
BRIDGE AT 154·750 km.
(JOYCE'S CREEK)
PROVISION OF INSPECTION WALKWAY.

STEELWORK DETAILS

23.10.87
MANAGER
CIVIL ENGINEERING DEPARTMENT

DATE	AUG. 1987
SCALE	1:10. 1:50
INDEX	3 - 954
DRAWING Nº	356/87
REV'N	